eco-ideal

Multifuel Room Heaters

The uniquely British environmentally friendly heating solution

All eco-ideal range is available with the option of a 2-5 year warranty. This is only valid if the stoves are serviced annually on the anniversary of installation.

For details of the warranty specifications please see page 9 under F.A.Q's and visit our website www.ecoidealfires.co.uk for full Terms and Conditions.

Ready for the future

eco-ideal isn't just a name – it's a statement. We believe that our British landscape is worth protecting. So we designed the eco-ideal range with significantly lower emissions than traditional multi-fuel stoves. Certified by European experts to be exempt from the Clean Air Act, every eco-ideal heater is permissible in Smoke Control areas.

Contents

eco 1	1
eco 2	3
eco 4	5
eco 6	7
Tripleburn technology	8
FAQs	9
Technical Key	10
Environmental	11
Technical Specifications	12

eco 1

A compact choice

We've squeezed all the eco features into a compact model. Perfect for British family homes.

We don't all have country manors with enormous fireplaces. So we asked our engineers to design a compact heater for today's British family. They've excelled themselves. With all the gorgeous good looks and features of the bigger versions, the eco 1 also has surprisingly neat dimensions. With a depth of only 343cm, the eco 1 won't dominate your room. But it's still got all our landmark technologies: the 'eco-ideal Cleanburn' system for efficient burning and a hot airwash for cleaner glass. Whether yours is a period terrace or a chic new home, the eco 1 will fit your lifestyle beautifully.

eco-ideal - eco 1

eco 2

Back to basics

This hard-working stove will serve your family for decades – and its classic looks will never go out of fashion.

You want a heater you can rely on? Something that's well made, and adaptable to different fuels? Something that won't be shut in a cupboard, but will provide a focal point? Well here it is. We're returning to classic stoves for a reason: they're stylish, they're efficient, and they won't fail in a power cut. The eco 2 produces an impressive 5.kW (max) of heat thanks to eco-ideal Cleanburn technology, which maximises results and reduces emissions.

What's more, you can use it to burn all kinds of fuel – including the branches that you pruned last year*. Forget flicking a switch and adjusting a thermostat, and get back to basics.

* Ensure wood is 20% moisture or less.

eco-ideal, eco 2

eco 4

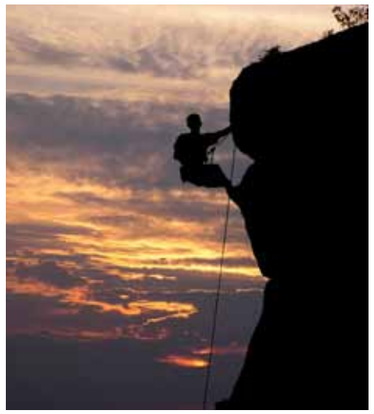

In a tight spot?

If your room is small or your hearth is narrow, here's your perfect match.

The eco 4 is our solution to a problem that is familiar in many British homes: awkward room shape, small fireplace. This space-saving room heater is not stingy when it comes to performance. You can load the compact fuel bed with smokeless fuel or wood and still enjoy a generous output of 5kW. This British-built heater features eco-ideal Cleanburn technology to make sure you get every bit of heat from your fuel.

The gorgeous single-pane door gives you a panoramic view, while a hot airwash keeps the glass cleaner. In other words, it's all our best bits – in a handsome, slender package.

eco ideal, eco 4

eco 6

Hot hearth, warm heart

Want a roaring fire, without the carbon guilt? Our biggest eco model blasts out 6.5kW – and it still meets the Clean Air Act requirement*. We don't mean to boast, but you just won't find a better room heater than this. The eco 6 is a medium-sized stove with a very big heart. Load it up with seasoned wood and enjoy a cosy fire with our lowest-ever emissions. You want the best for your family, and we've made it happen: you'll get eco-ideal Cleanburn and Tripleburn technology for performance, plus hot airwash for convenience. Our engineers put their very best work into making the EcoFamily a British best. What better recommendation could there be?

eco-ideal, eco 6

* Letter of recommendation meeting DEFRA requirements subject to approval in October 2011

eco-ideal Tripleburn® technology

So how does our famous Tripleburn work? It involves the use of three streams of air to maximise combustion. Air is drawn in beneath the fuel, above the fuel (passing in front of the glass door), and behind the fuel. This hot air improves ignition so that the wood or smokeless fuel is burned more efficiently.

What this efficiency actually means is that you'll get more warmth from your stove – a better performance from less fuel. You can heat your living space for less than other options might cost. It also means that there's less carbon monoxide and hydrocarbon travelling up the chimney – for a cleaner atmosphere. So there's an environmental benefit on top of the economical benefit. Some would call it win-win-win; we call it Tripleburn.

Optimum woodburning conditions

The Tripleburn® technology improves the ignition of the fuel, with a jet of air directed into the heart of the fire. When the grate is in the closed position, creating a flat base, it allows a deep bed of ash to build up – these are the optimum conditions for burning wood.

Optimum solid fuel burning conditions

When burning smokeless fuel, the grate is moved to the open position by a single turn of the handle. Air is then directed under the open grate and into the heart of the fire, ensuring a clean, efficient burn.

Independently CE tested and approved

All the stoves in the eco-ideal range meet the stringent CE approval test requirements

Designed for and tested under the Danish testing standards.

- Tripleburn® technology
- Exceptionally hot air wash
- Dust free, safe and easy riddling
- Multi-fuel grate system for burning wood or solid fuel

Airwash keeps the glass clean

Hot Airwash Technology does the work for you. A secondary air 'wash' maintains a stream of air between fuel and door, reducing the build-up of carbon deposits on the glass.

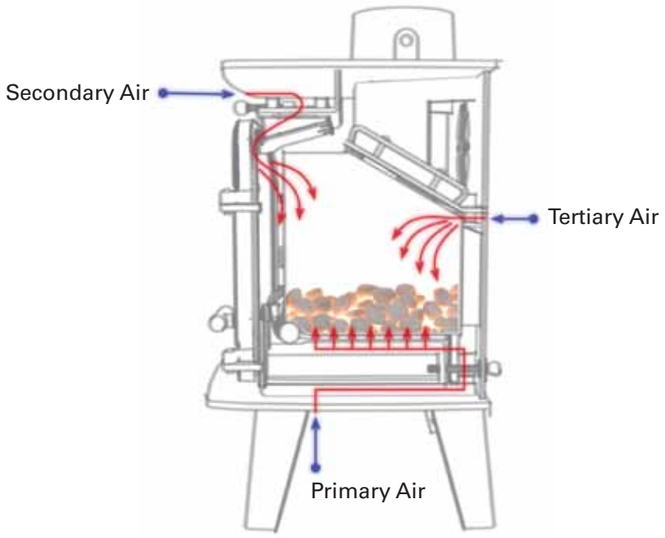

FAQs

DOES ECO-IDEAL SELL DIRECT TO THE PUBLIC?
No. We have a network of trusted dealers with showrooms throughout the UK and Europe. To locate your nearest dealer please visit our website www.ecoidealfires.co.uk and use our Dealer Locater link on the home page.

HOW DO I GET MY NEW STOVE INSTALLED?
Installation must be carried out by a Hetas-approved or similarly qualified engineer and must be in accordance with Building Regulations.

To investigate the suitability of your chimney, contact your local dealer, who will be pleased to arrange a site visit. This is very important, because the condition of your chimney will determine how well your stove performs; a poor chimney system will affect its efficiency. Any existing flue must be swept and inspected before installation of the stove. All multi-fuel/ wood burners must be installed in a class 1 chimney.

WHAT IF I DON'T HAVE A CHIMNEY?
There are many different flue systems available. Please contact your local dealer/ flue installer, who will be able to give you personal advice.

CAN I CONNECT TWO STOVES TO ONE FLUE SYSTEM?
No. All eco-ideal Stoves must be individually flued.

MY STOVE HAS A 6" FLUE COLLAR; CAN I INSTALL IT ON A 5" FLUE?
No. The internal diameter of the flue must be no smaller than the appliance flue collar for its entire length.

DOES MY CHIMNEY NEED LINING?
This is to be decided by your qualified Engineer.

DO I NEED AN AIR BRICK?
Yes if the output is above 5kw.

CAN I SWEEP MY CHIMNEY THROUGH THE STOVE?
Yes – it is possible to sweep the chimney through the stove, if a damper is not fitted

WHAT TYPE OF FUEL CAN I USE?
The quality of fuel will dictate the performance of your eco-ideal Stove.

WOODBURNING
Burn only dry, well seasoned wood. For best results, use dry wood, with a moisture content of less than 20%, which has been cut, split and stacked for at least 12 months. This is advertised as 'seasoned' wood. Burning wet or unseasoned wood will create tar deposits in the stove and chimney and won't produce a satisfactory heat output.

Wood burns best on a bed of ash and it is therefore only necessary to remove surplus ash from the stove occasionally.

PEAT
Only to be used in turf or brick form, but the moisture content must be very low.

SOLID FUEL BURNING
Anthracite is an approved natural smokeless fuel (not processed) but can vary greatly in quality and performance. It generally requires excellent air supply to maintain maximum performance and with experience we would suggest that it is used in conjunction with other approved manufactured smokeless fuels as per the HETAS approved list.

Please vist www.hetas.co.uk for an up to date list of approved Manufactured Smokeless Fuels suitable for closed appliances.

Only authorised smokeless fuels may be used in smoke control areas.

Warning! - Petroleum coke fuels or household waste must not be burnt on our appliances. Should any difficulties arise over fuel quality or suitability, consult your approved coal merchant or the Solid Fuel Advisory Service – Telephone 0845 6014406.

CAN I BURN WOOD ON MY MULTI-FUEL GRATE?
Yes. All eco-ideal multi-fuel appliances are capable of burning wood. See above for wood requirements.

HOW MUCH SPACE WILL MY STOVE NEED?
With all our freestanding units it is safe to install with a clearance of 2" (50mm) either side and above the stove to NON Combustible material. However for optimum performance and heat output we recommend a clearance of 6" (150mm). Behind the stove there should be a clearance of 4" (100mm) to enable access to the Tertiary Air inlet.

For all our units the hearth should extend 300mm in front of the appliance (from the door opening)

WHAT IS A GATHER BOX AND WHEN IS IT NEEDED?
A gather box is for rear flue installations where space is limited. It bolts directly on to the rear of the stove in place of the collar. Please see page ? for image.

DO I NEED A DAMPER?
If your chimney has an exceptionally good draught, it may be worth fitting a damper. This helps reduce the pull on the chimney and helps keep heat within the firebox which is then transferred into the room. A damper also helps when burning wood over night as it slows the burn rate down and increases the burn time on the wood. (Please not cannot be installed if in a smokeless zone).

WHAT WARRANTY DO I GET ON MY STOVE?
All eco-ideal Authorised Dealers provide you with a standard 2 year warranty*. eco-ideal also come with a 5 year casting warranty* For full warranty specifications please visit www. eco-ideal.co.uk (*Naturally wearing consumables such as glass, bricks, baffles, log retainers etc are excluded from this warranty. **The casting warranty does not cover items such as grate parts etc)

For a list of authorised stockists please use our dealer locater which can be found on our website www.ecoidealfires.co.uk

Technical key

	eco 1	eco 2	eco 4	eco 6
	Room Heater	Room Heater	Room Heater	Room Heater
Output nominal /max Kw	4.9 kw	4.9 kw	4.5 kw	7 kw
Efficiency on wood %	75%	82%	72.5%	78.9%
Clean air act approved*	✔	✔	✔	✔
FlatTop	✔	✔	✔	✔
Single door option	•	•	•	•
Grate option (riddling grate)	✔	✔	✔	✔
Stainless steel knob set	✔	✔	✔	✔
Flue Damper	•	•	•	•
Flue gather box	•	•	•	•
Coloured finish	•	•	•	•
Ventilation (mm^2)	0	0	0	1100mm2.
Log sizes (approx)	330mm - 13″	280mm - 11″	405mm - 16″	380mm - 15″
Leg Lengths	148mm - 5 3/4″	148mm - 5 3/4″	127mm - 5″	176mm - 7″
Weight	103kg	104kg	99kg	105kg

✔ = standard • = option ~ = not available

* Letter of recommendation meeting DEFRA requirements subject to approval in October 2011

NB. Please note that all weights are approximate and could vary slightly.

Heat outputs are dependent on fuel load and installation parameters. Performance of units can vary greatly dependent on flu draughts, weather conditions, type of fuel and moisture content etc. eco-ideal has a policy of continuous product improvement and therefore reserves the right to change specifications and designs at any time without prior notice. eco-ideal recommends that the suitability of any installation should firstly be agreed with a HETAS qualified installer, or similarly accredited professional, to ensure compliance with Building Regulations. eco-ideal will not be held responsible for any losses, however arising, from inappropriate installations by unqualified or non-competent installers. An inappropriate installation may also invalidate claims made under the manufacturer's warranty or guarantee.

Lowering your environmental impact

Concerned about your carbon footprint? Take action. Our eco 3 stove offer efficient home heating – with minimal environmental impact. And we've got the test results to prove it...

DEFRA Clean Air Act Approved

Approved for Smoke Control Areas

If you live in a designated Smoke Control Area, the Clean Air Act prevents you from emitting smoke from your chimney – with offenders facing a fine of up to £1000. This means you're usually only able to burn authorised smokeless fuel.

However, the Eco-ideal isn't like ordinary stoves. It smokes so little that come October 2011 DEFRA will declare it exempt from the Clean Air regulations. This means that you can use a Eco-ideal (with grate) to burn wood logs, even if you live in a Smoke Control Area.

The Eco-ideal's built-in technology ensures that emissions are consistently low. We're delighted to have met the stringent demands of the Department for the Environment, Food & Rural Affairs. And, especially if you're in a Smoke Control Area, you'll be equally delighted with the results.

Technical Specifications

Made in Britain

We're proud to be designing and building our heaters in Britain. Our country has a long history of excellent design and craftsmanship: from Anglepoise to Conran and Ercol, designers have helped to make our homes great. If you appreciate form and function then you'll love eco-ideal. It's stylish, solid, and characteristically Britis, just the way we like it.

eco-ideal Options

Your new stove is ready to be customised.

Would you like a colour to match your interior?

Optional flue damper and gather box: use the damper to reduce the air inflow and let your stove burn slowly overnight when burning wood. The flue gather channels smoke into the flue; check whether you have or need one.

Optional flue damper

Optional flue gather box

Make it unique: choose a subtle, Cloudy Blue, Midnight Black (standard) or Forest Green finish for your stove.

(Colours shown may differ to actual shades.)

Alternative colours are available contact your dealer for a colour chart.

eco-ideal eco 1

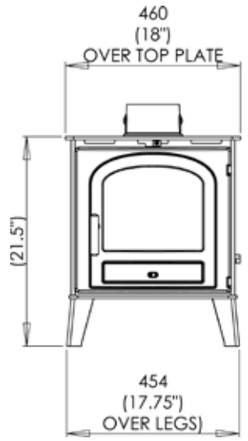

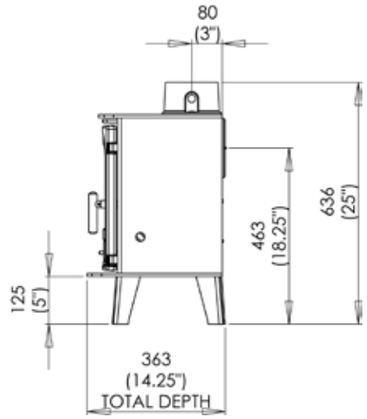

Clearances go here :-)

✔ 4.9kW output

eco-ideal eco 2

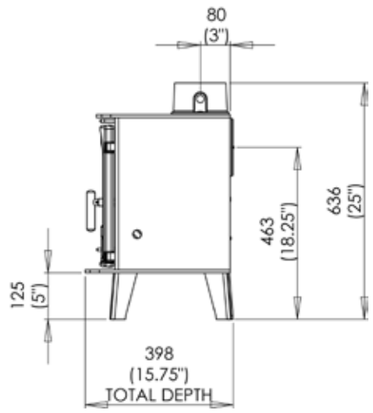

Clearances go here :-)

✔ 4.9kW output

eco-ideal, eco 6

eco-ideal eco 4

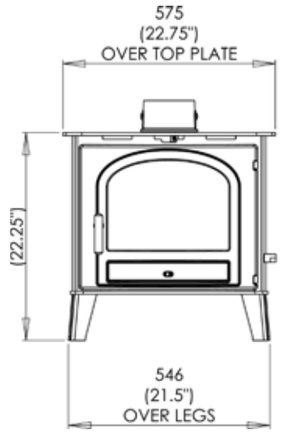

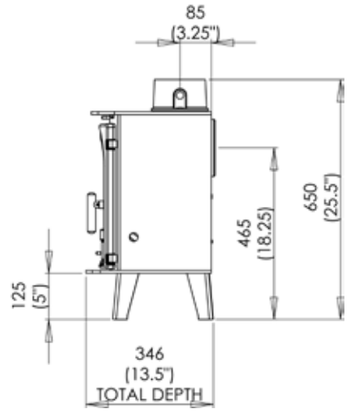

Clearances go here :-)

✔ 4.5kW output

eco-ideal eco 6

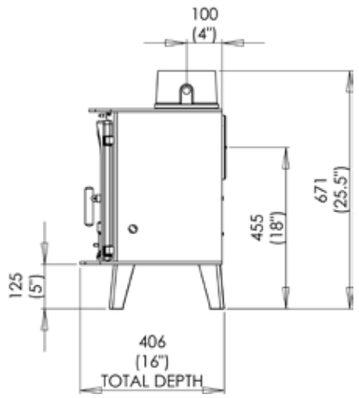

Clearances go here :-)

✔ 7kW output

Your Local Stockist

Eco-ideal
Unit 6 Old Mill Industrial Estate
Stoke Canon
Devon EX5 4RJ

www.ecoidealfires.co.uk • info@ecoidealfires.co.uk

EI 09 11